FORM:	TECH.790-01
VERSION:	1911
TOTAL PAGES:	11

TECHNICAL DOCUMENTATION

B110 & B120 Setting Tool

Table of Contents

General Guidelines

Hydraulic Setting Tool

Description 2

Assembly 3

Operation 8

Fill Sub

Description 11

Operation 11

www.silver-fox.net

The information contained herein is the property of Silver Fox Completion Services and is considered confidential.
It may not be copied or reproduced in any form without express written consent by Silver Fox Completion Services.

General Guidelines

Receipt of Goods

Upon receipt of goods, Silver Fox recommends disassembly and inspection of the tool unless stated otherwise. Ensure parts have not been damaged during shipping. If any parts are damaged, contact your local Silver Fox representative for replacement parts.

Pre-Run Inspection

CAUTION: Silver Fox does not tighten tools to be field ready, all tool connections made-up **HAND TIGHT**—labeled with tape or band attached to the tool. Customer is required to tighten/torque all connections properly before operating tool.

Before and after each usage of the tool, Silver Fox recommends disassembly and thorough inspection of the tool. Clean parts and ensure parts are in good working condition. Replace worn or damaged parts with Silver Fox replacement parts. Re-assemble the tool, and take care in proper installation of all parts in the correct sequence and orientation. If tool is being set up for use, then Properly tighten all connections to proper specifications.

GENERAL THREAD CONNECTION TORQUE RECOMMENDATIONS			
STUB ACME/ ACME THREADS	INTERNAL TAPERED TUBING THREADS		PREMIUM THREADS
	UP TO 2-3/8"	GREATER THAN 2-3/8"	
600 - 800 FT-LBS	600 - 800 FT-LBS	800 - 1,200 FT-LBS	Consult thread manufacturers recommendations

GENERAL SCREW TORQUE RECOMMENDATIONS (General screw torque recommendations not applicable to mated parts specified in SPEC014)									
SCREW SIZE (INCHES)	#6	#8	#10	1/4	5/16	3/8	7/16	1/2	5/8
TORQUE RANGE (IN-LBS)	5-8	10-15	18-25	25-40	50-80	90-135	160-210	250-330	450-650

ReDress Inspection

When redressing the tool, Silver Fox recommends replacement of all seals, elements, o-rings, shear screws, etc. Contact Silver Fox sales for redress kit and/or other replacement part information.

Hydraulic Setting Tool

Description

The B Hydraulic Setting Tool is used to run and set on Tubing, Coiled Tubing or Drill Pipe most packers which are normally set on wireline. It is especially applicable for use in deviated wells where it is not practical to run the tools on wireline or in situations where a wireline Unit is not available.

The B Setting Tool uses a bottom connection identical to the Baker E-4 Pressure Setting Assemblies. It is uniquely designed so additional piston sections may be added in order to lower the required setting pressure.

B110
3 Stage
Baker 10

B120
5 Stage
Baker 20

Features:

- Simple operation
- Compact, Short, easy to transport and run
- Pressure chambers can be added to lower setting pressure
- Parts are interchangeable with other manufacturers

Optional Accessory:

- Fill Sub top sub can be an added accessory allowing user to run tubing in Open condition.

Specifications

Setting Tool Info			
MODEL	**THREAD**	**STAGES**	**PART NO**
B110	2-3/8	3 STAGE	790-21100
		4 STAGE	790-21103
		5 STAGE	790-21106
B120	2-3/8	3 STAGE	790-21200
		4 STAGE	790-21203
		5 STAGE	790-21206

Silver-Fox.Net

TECHNICAL DOCUMENTATION

B110 & B120 Setting Tool

Assembly

Use grease or pipe dope on all threaded connections and white Grease on all O-rings, Vee seals, and Inner Sleeve. See General Guidelines for torque ratings.

The Assembly instructions are for both B110 and B120 HST. The Common parts are required for either assembly. See B110 or B120 further down to complete either assembly.

Common Parts

1. Grease and install all O-Rings in appropriate locations.

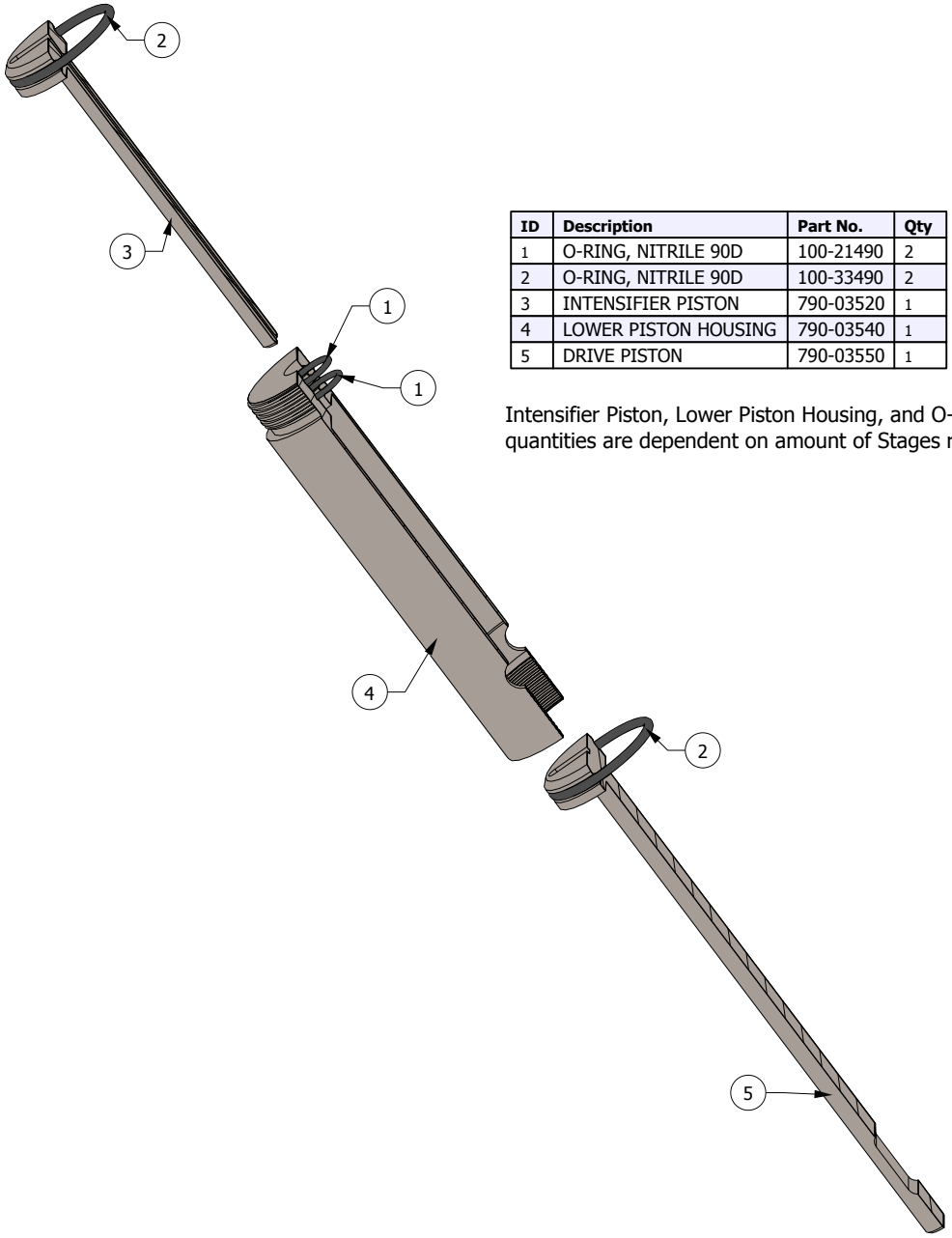

ID	Description	Part No.	Qty
1	O-RING, NITRILE 90D	100-21490	2
2	O-RING, NITRILE 90D	100-33490	2
3	INTENSIFIER PISTON	790-03520	1
4	LOWER PISTON HOUSING	790-03540	1
5	DRIVE PISTON	790-03550	1

Intensifier Piston, Lower Piston Housing, and O-Ring quantities are dependent on amount of Stages required

2. Install intensifier piston into upper piston housing

3. Install intensifier piston into middle piston housing, REPEAT for multiple stage count

NOTE: These parts can be added or deleted as a group to increase or decrease the number of stages in the setting tool (see dwg note).

4. Install drive piston **HALFWAY** into lower piston housing.

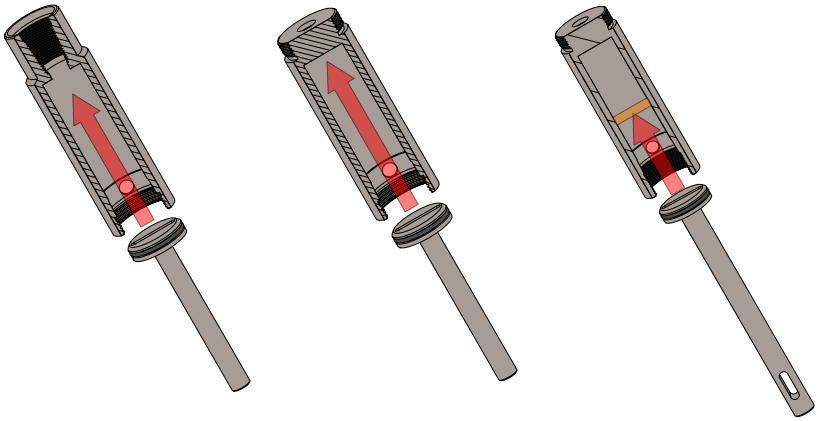

5. Clamp Upper piston housing into vice. Thread together and tighten upper piston housing, middle piston housings, and lower piston housing.

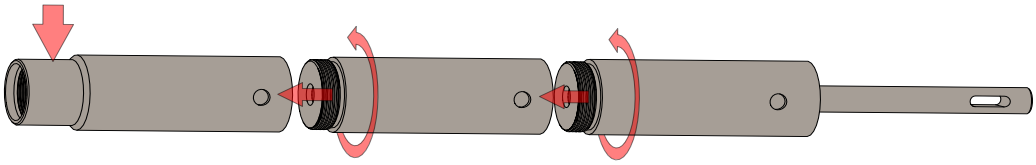

B110 Assembly

1. Screw Lower cap item into Lower piston housing, and tighten.

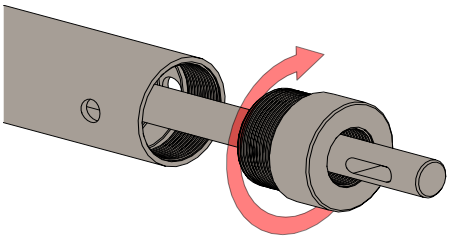

2. Slide Key sleeve over Drive piston and thread **HAND TIGHT** into Lower cap.

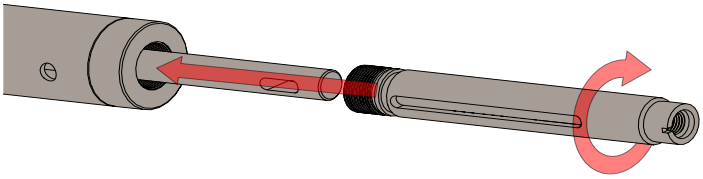

3. Slide Key Retainer up to Lower Cap.

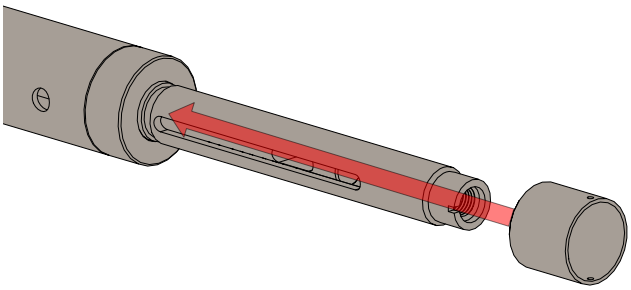

4. Slide Lower Sleeve over Key sleeve and line up the slots through all three pieces.

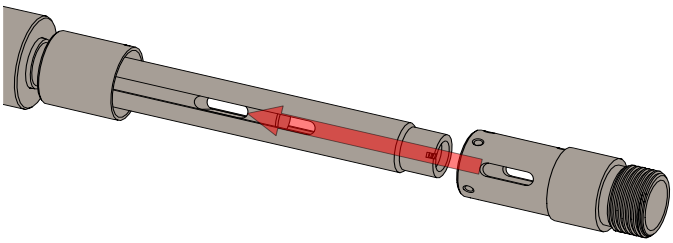

5. Install Key through all parts

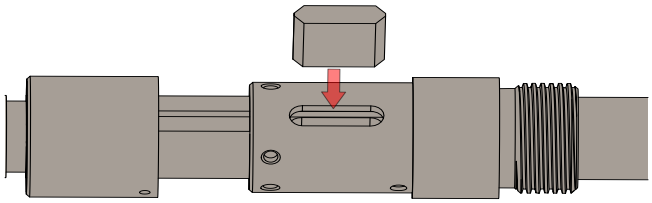

6. then slide Key Retainer down over Lower sleeve (covering Key).

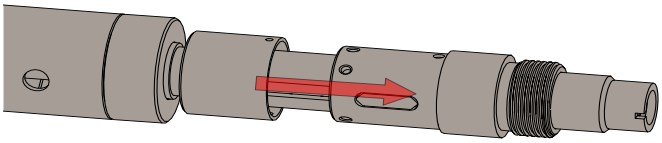

7. Align holes in Key Retainer to the spot faces in the Lower Sleeve, install set screws.

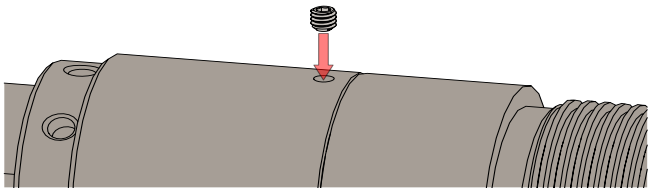

8. Push the Lower Sleeve up until screw holes line up with shear groove.

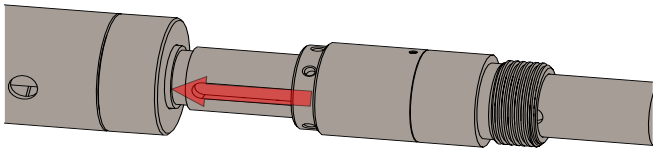

9. Tighten Drive Piston into Lower Cap

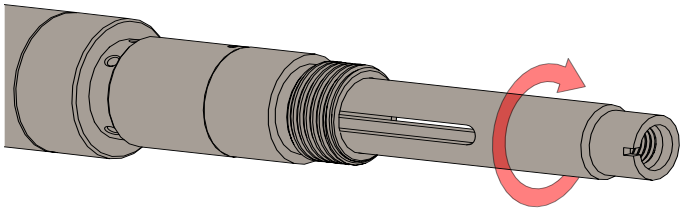

10. Install Shear Screws

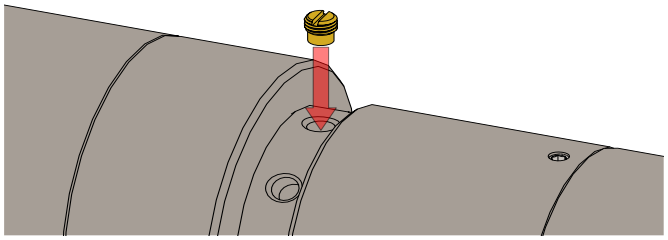

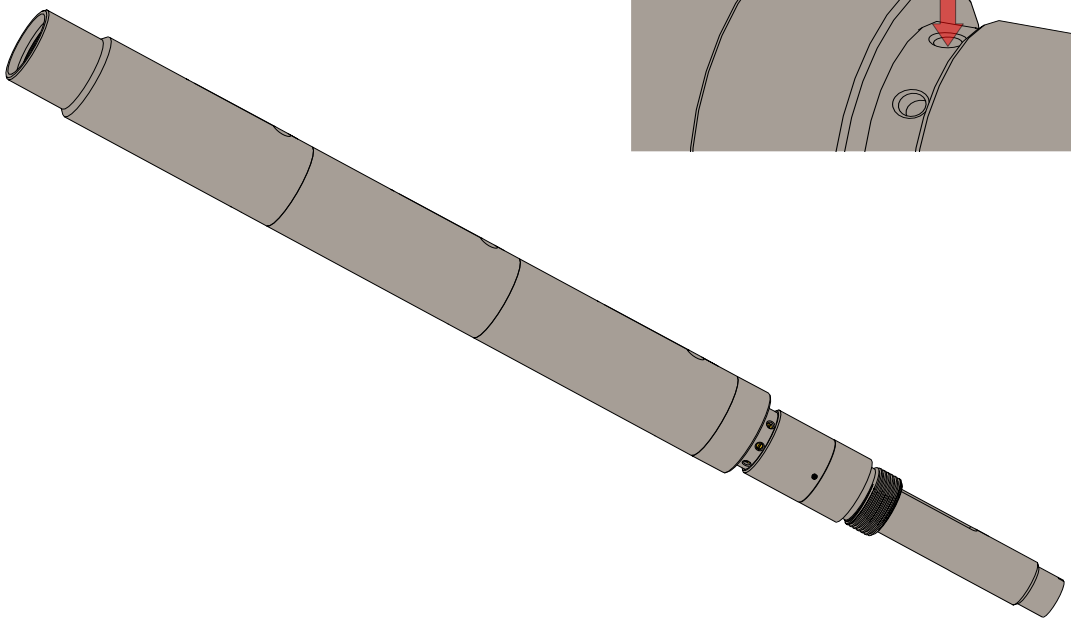

B120 Assembly

1. Screw Lower cap item into Lower piston housing, and tighten.

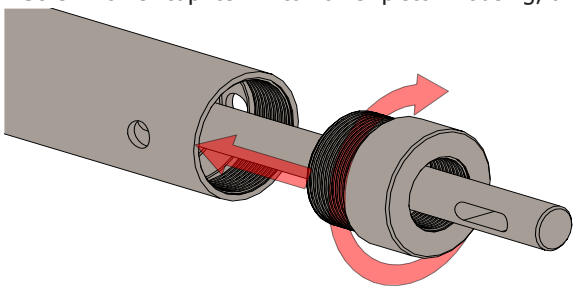

2. Slide Key sleeve over Drive piston and thread **HAND TIGHT** into Lower cap.

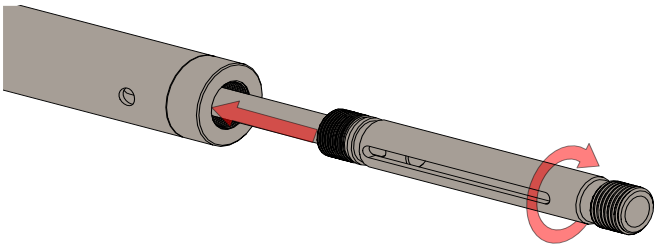

3. Slide Key Retainer up onto Lower Cap.

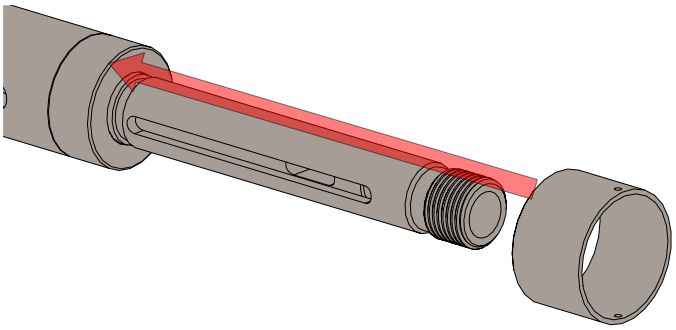

4. Slide Lower Sleeve over Key sleeve and line up the slots through all three pieces.

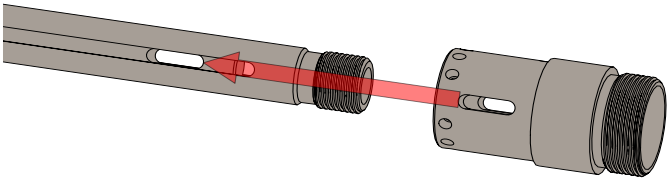

5. Install Key through all parts

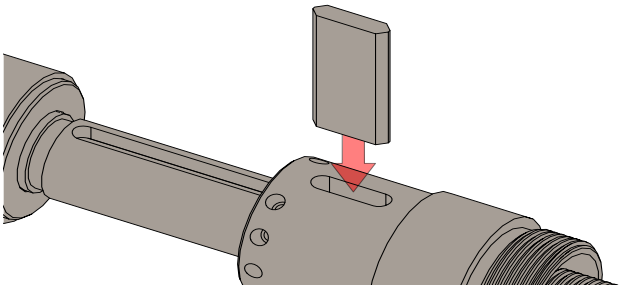

6. Push the Lower Sleeve up until screw holes line up with shear groove.

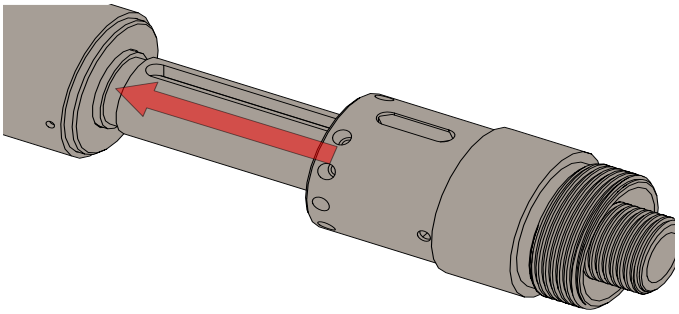

7. Slide Key Retainer down over Lower sleeve (covering Key).

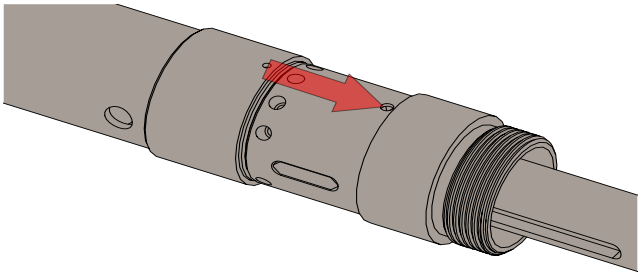

8. Align holes in Key Retainer to the spot faces in the Lower Sleeve, install set screws.

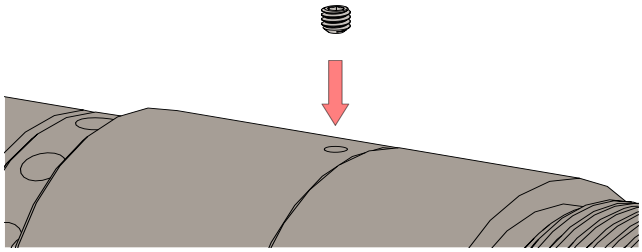

9. Tighten Drive Piston into Lower Cap

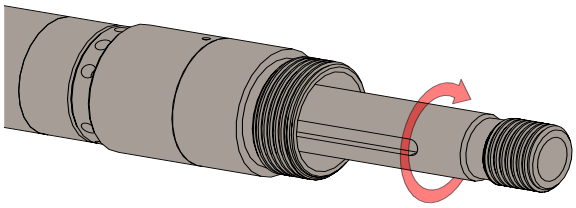

10. Install Shear Screws

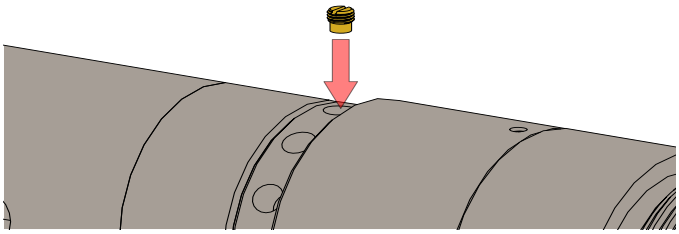

11. Thread Adjuster Sub onto Key Sleeve. Tighten Adjuster Sub and Drive Piston

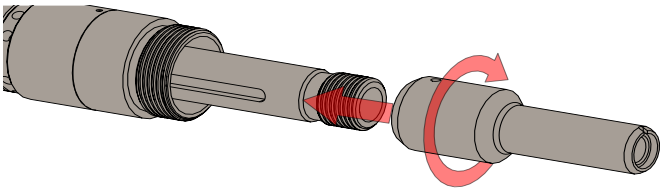

12. Install Set Screw

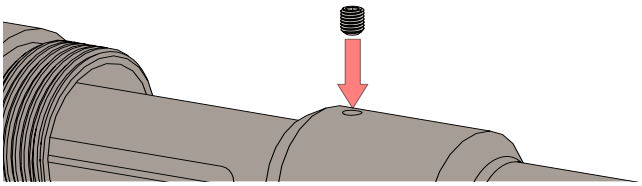

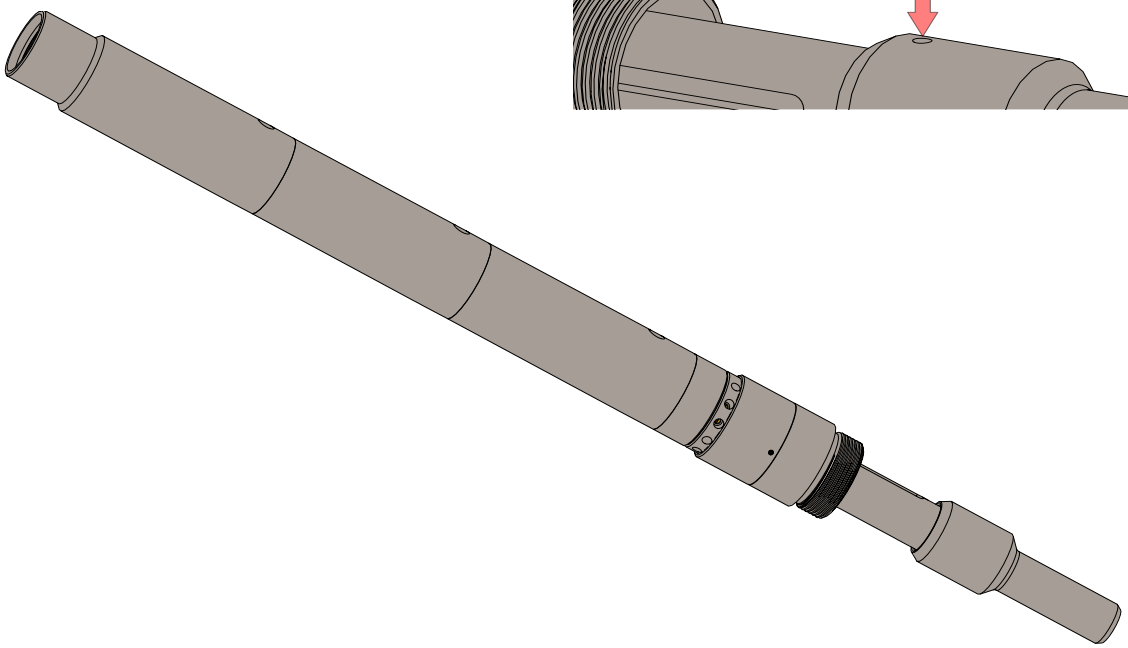

Operation

This Setting Tool uses the same adapters for running as are used with a Baker E-4 Wireline Setting Tool.

The B Setting Tool is run into the desired setting depth. Sufficient pressure is applied to set and pack off the Packer or Bridge Plug. The pressure or combination of pressure and tubing tension, then shears the Shear Stud or Ring, freeing the Setting Assembly from the Packer or Bridge Plug. The Setting Tool will automatically drain the Tubing String as it is being pulled.

B110 & B120 Force chart

Required Pressure (PSI) for Setting Force (LBS)				
Number of Pistons	Effective Piston Area	Pressure Required to Generate:		
		35K	45K	55K
1	7.0	5000	6429	7857
2	13.9	2518	3237	3957
3	20.7	1690	2175	2655
4	27.5	1270	1635	2000
5	34.3	1015	1300	1600

Silver-Fox.Net

TECH UNIT

PRODUCT NO. 790-211xx

B110 HYDRAULIC SETTING TOOL

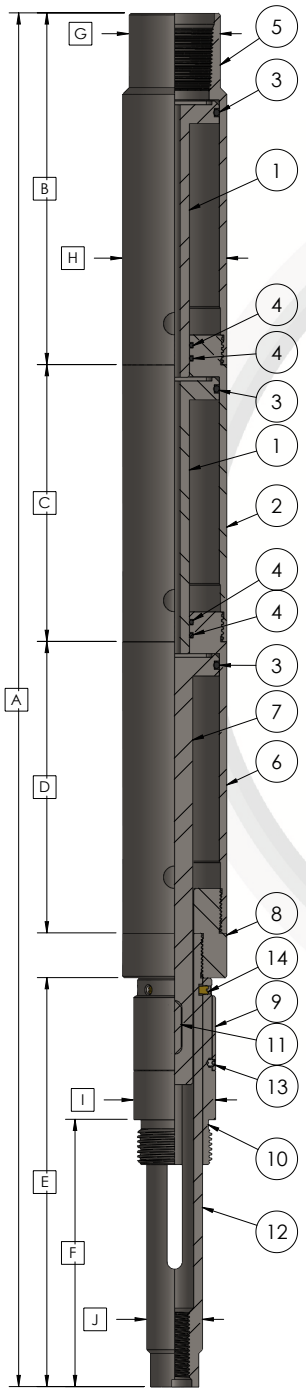

*790-21100 SHOWN

GENERAL SPECIFICATIONS				
ASSEMBLY NUMBER	STAGES	REQ'D PRESSURE (PSI) FOR SETTING FORCE (LB)		
		35K	45K	55K
790-21100	3 STAGE	1690	2175	2655
790-21103	4 STAGE	1270	1635	2000
790-21106	5 STAGE	1015	1300	1600

BILL OF MATERIALS		790-21100 3 STAGE	790-21103 4 STAGE	790-21106 5 STAGE	
ITEM	DESCRIPTION	QTY.			PART NUMBER
1	INTENSIFIER PISTON	2	3	4	790-03520
2	MIDDLE PISTON HOUSING	1	2	3	790-03530
3	O-RING, NITRILE 90D	3	4	5	100-33490
4	O-RING, NITRILE 90D	4	6	8	100-21490

COMMON BILL OF MATERIALS			
ITEM	DESCRIPTION	QTY.	PART NUMBER
5	UPPER PISTON HOUSING	1	790-03510
6	LOWER PISTON HOUSING	1	790-03540
7	DRIVE PISTON	1	790-03550
8	LOWER CAP	1	790-03570
9	KEY RETAINER	1	790-03600
10	LOWER SLEEVE	1	790-03560
11	KEY	1	790-03610
12	KEY SLEEVE	1	790-03580
13	SET SCREW	2	150-00603
14	SHEAR SCREW, BRASS	6	150-00805

DIMENSIONS			
	2 3/8" EUE B110		
	790-21100	790-21103	790-21106
	3 STAGE	4 STAGE	5 STAGE
A	46.050	55.330	64.610
B	11.790		
C	1X 9.280	2X 9.280	3X 9.280
D	9.770		
E	13.710		
F	8.960		
G	3.063		
H	3.500		
I	2.750		
J	1.875		

Silver-Fox.Net

TECH UNIT

PRODUCT NO. 790-212xx

B120 HYDRAULIC SETTING TOOL

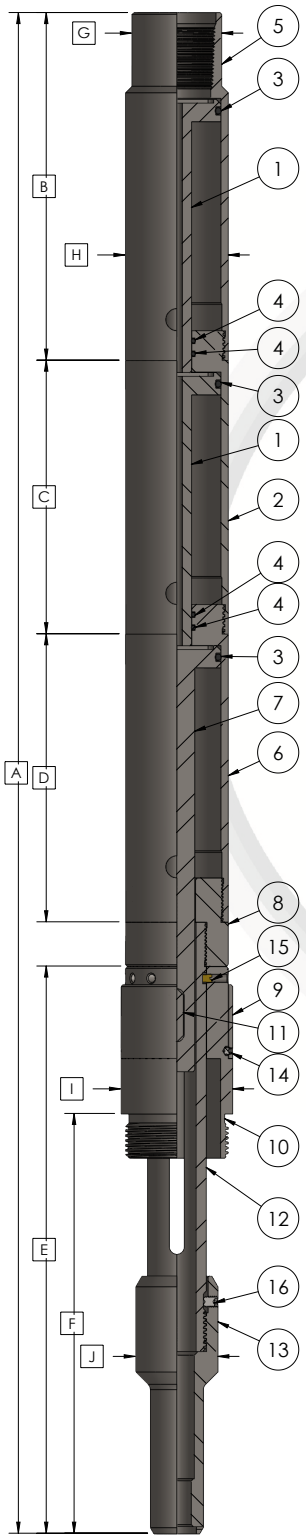

*790-21200 SHOWN

GENERAL SPECIFICATIONS				
ASSEMBLY NUMBER	STAGES	REQ'D PRESSURE (PSI) FOR SETTING FORCE (LB)		
		35K	45K	55K
790-21200	3 STAGE	1690	2175	2655
790-21203	4 STAGE	1270	1635	2000
790-21206	5 STAGE	1015	1300	1600

BILL OF MATERIALS		790-21200	790-21203	790-21206	
		3 STAGE	4 STAGE	5 STAGE	
ITEM	DESCRIPTION	QTY.			PART NUMBER
1	INTENSIFIER PISTON	2	3	4	790-03520
2	MIDDLE PISTON HOUSING	1	2	3	790-03530
3	O-RING, NITRILE 90D	3	4	5	100-33490
4	O-RING, NITRILE 90D	4	6	8	100-21490

COMMON BILL OF MATERIALS			
ITEM	DESCRIPTION	QTY.	PART NUMBER
5	UPPER PISTON HOUSING	1	790-03510
6	LOWER PISTON HOUSING	1	790-03540
7	DRIVE PISTON	1	790-03550
8	LOWER CAP	1	790-04270
9	KEY RETAINER	1	790-04300
10	LOWER SLEEVE	1	790-04340
11	KEY	1	790-04310
12	KEY SLEEVE	1	790-04280
13	ADJUSTER SUB, BAKER 20	1	411-05080
14	SET SCREW	2	150-00603
15	SHEAR SCREW, BRASS	10	150-00805
16	SET SCREW	1	150-00601

DIMENSIONS			
	2 3/8" EUE B120		
	790-21200	790-21203	790-21206
	3 STAGE	4 STAGE	5 STAGE
A	51.578	60.858	70.138
B	11.790		
C	1X 9.280	2X 9.280	3X 9.280
D	9.770		
E	19.238		
F	14.238		
G	3.063		
H	3.500		
I	3.800		
J	2.800		

Fill Sub

Description

A Fill Sub can be used in conjunction with the B Setting Tool. This tool allows the tubing to be ran in an open condition, allowing it to be filled during the run in procedure. A Ball is used to shift the Fill Sub to the closed position, the ball can be either dropped from surface or ran in place.

This tool is threaded directly onto the top of the B Setting Tool.

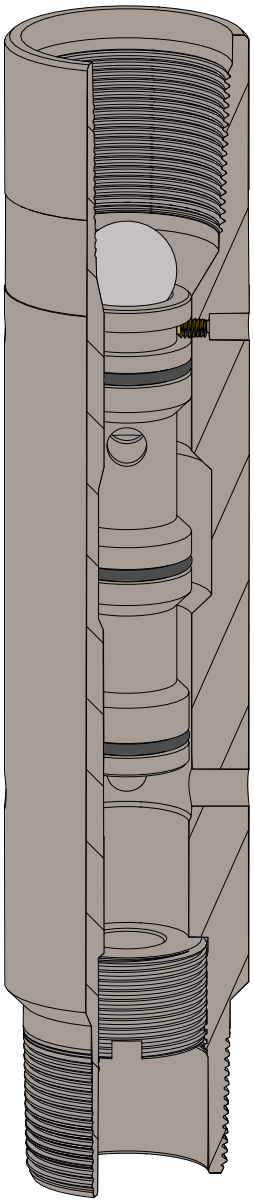

Operation

Once setting depth has been achieved, pressure activates the ball against the seat, shifting sleeve to the closed position, the pressure is then allowed to flow through the Fill Sub and apply against the B Setting Tool.

Features:

- Simple operation
- Compact, Short, easy to transport and run
- Allow tubing to be run in OPEN condition

Specifications

THREAD	PART NO
2-3/8	790-02380