Silver-Fox.Net

PRODUCT CODE: 730

REVISED Apr/28/22
REV. A

TECH UNIT

PRODUCT NO. 730-5x200-T

5 1/2" X 2 3/8" MECHANICAL COLLAR LOCATOR, SOLID

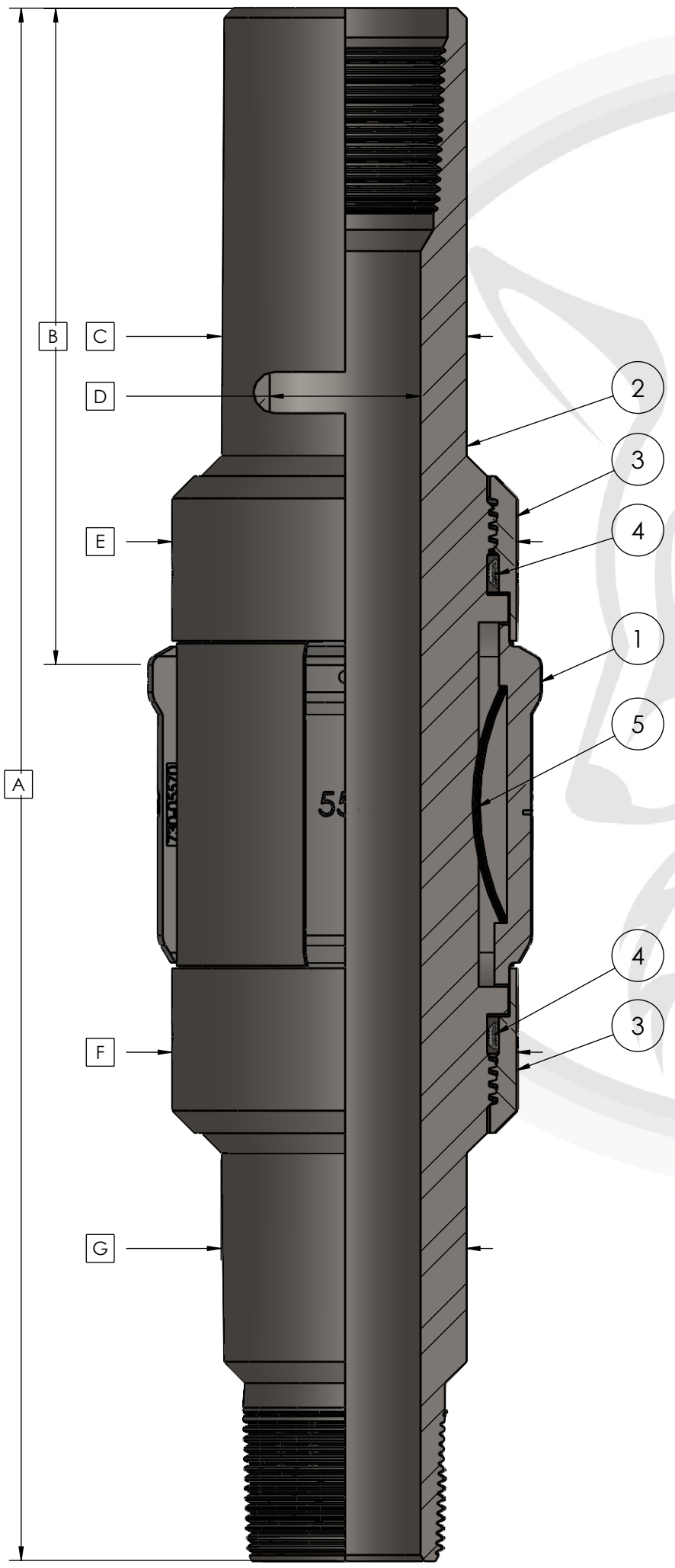

GENERAL SPECIFICATIONS			
ASSEMBLY NUMBER	CASING		SETTING RANGE
	OD (IN)	WEIGHT (LB/FT)	ID (IN)
730-55200	5.500	17.0-23.0	4.670-4.892
730-56200		13.0-17.0	4.892-5.044

BILL OF MATERIALS			730-55200 (17.0-23.0#)	730-56200 (13.0-17.0#)
ITEM	DESCRIPTION	QTY.	PART NUMBER	
1	LOCATOR KEY	4	730-05570	730-05670

COMMON BILL OF MATERIALS			
ITEM	DESCRIPTION	QTY.	PART NUMBER
2	BODY	1	730-05590
3	RETAINING RING	2	730-05550
4	SET SCREW	4	150-00621
5	DRAG BLOCK SPRING	12	150-09900

DIMENSIONS		
	5 1/2" X 2 3/8"	
	730-55200	730-56200
	17.0-23.0#	13.0-17.0#
A	19.63	
B	8.23	8.27
C	3.13	
D	2.00	
E	4.38	
F	4.38	
G	3.13	