Silver-Fox.Net

PRODUCT CODE: 730

REVISED Apr/28/22
REV. A

TECH UNIT

PRODUCT NO. 730-4x200-T

4 1/2" MECHANICAL COLLAR LOCATOR, SOLID

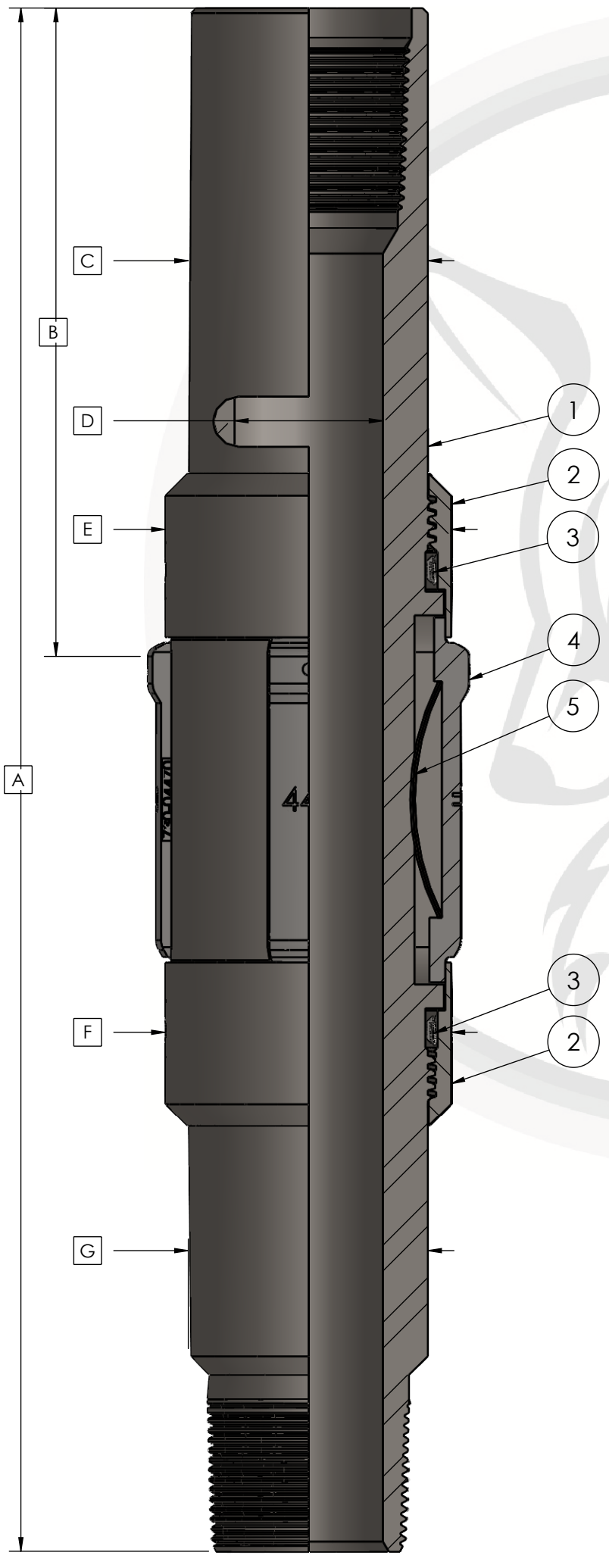

GENERAL SPECIFICATIONS			
ASSEMBLY NUMBER	CASING		SETTING RANGE
	OD (IN)	WEIGHT (LB/FT)	ID (IN)
730-44200	4.500	13.5-15.1	3.826-3.920
730-45200		9.5-12.6	3.958-4.090

BILL OF MATERIALS			730-44200 (13.5-15.1#)	730-45200 (9.5-12.6#)
ITEM	DESCRIPTION	QTY.	PART NUMBER	
1	BODY	1	730-04490	730-04590
2	RETAINING RING	2	730-04450	730-04550
3	SET SCREW	4	150-00621	
4	LOCATOR KEY	4	730-04470	730-04570
5	DRAG BLOCK SPRING	8	150-09900	

DIMENSIONS		
	4 1/2" X 2 3/8"	
	730-44200	730-45200
	13.5-15.1#	9.5-12.6#
A	19.63	
B	8.18	8.20
C	3.06	
D	1.94	
E	3.65	3.75
F	3.65	3.75
G	3.06	